4.5V-85V Vin, 600mA, High Efficiency Synchronous Step-down DCDC Converter with Programmable Frequency

FEATURES

- Wide Input Range: 4.5V-85V
- 600mA Continuous Output Current
- 0.8V ±1% Feedback Reference Voltage
- Integrated 770mΩ High-Side and 460mΩ Low-Side Power MOSFETs
- Pulse Frequency Modulation (PFM) with 100uA Quiescent Current in Sleep Mode
- 100ns Minimum On-time
- 4ms Internal Soft-start Time
- Adjustable Frequency 300KHz to 800KHz
- Precision Enable Threshold for Programmable Input Voltage Under-Voltage Lock Out Protection (UVLO) Threshold and Hysteresis
- Cycle-by-Cycle Current Limiting
- Over-Voltage Protection
- Over-Temperature Protection
- Available in an ESOP-8 Package

APPLICATIONS

- E-Tools
- E-bike, Scooter
- Industry System

DESCRIPTION

The SCT2A10 is 600mA synchronous buck converters with wide input voltage, ranging from 4.5V to 85V, which integrates an 770mΩ high-side MOSFET and a 460mΩ low-side MOSFET. The SCT2A10, adopting the constant-on time (COT) mode control, supports the PFM with typical 100uA low quiescent current which assists the converter on achieving high efficiency at light load or standby condition.

This user's guide describes the characteristics, operation and the use of the EV2A10-B-03A Evaluation Module including EVM specifications, recommended test setup, test result, schematic diagram, bill of materials, and the board layout.

Board Number	IC Number
EV2A10-B-03A	SCT2A10

PERFORMANCE SUMMARY

Table 1. Performance — Specifications are at TA = 25°C

Parameter	Condition	Value
Input Voltage	DC up to 85V	4.5V-85V
Output Voltage		12V ± 1%
Output Current	Continuous DC current	600mA
Frequency	Default	500KHz

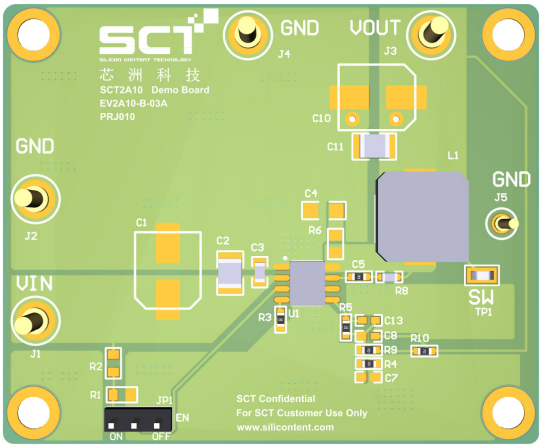

EV2A10-B-03A Evaluation Board Top View

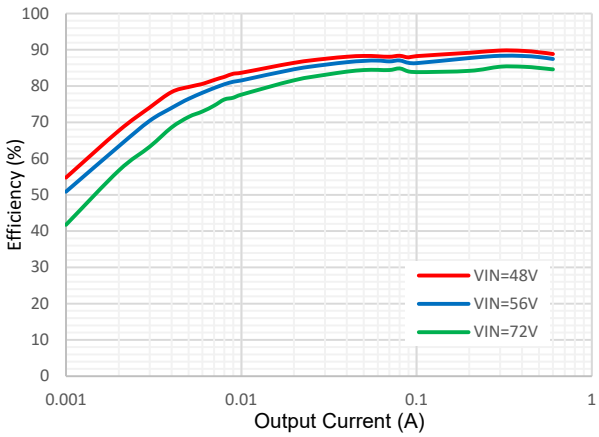

SCT2A10 Efficiency VOUT=12V

© 2018 Silicon Content Technology Co., Ltd. All Rights Reserved

QUICK START PROCESURE

Evaluation board EV2A10-B-03A is easy to set up to evaluate the performance of the SCT2A10. Refer to Figure 1 for proper measurement equipment setup and follow the procedure below:

1. Place jumpers in the following positions:
   - J1, J2: Input terminal. Connect the power supply to the input of converter.
   - J3, J4: Output terminal. Connect the load to the output of converter.
   - JP1: Enable Jumper. Install ON shunt to connect EN pin to V_{in} through a 100KΩ resistor to enable IC. Install OFF shunt to disable IC.
2. With power off, connect the input power supply to J1 V_{IN} connector and J2 GND connector. Turn on the power at the input. Make sure that the input voltage does not exceed 85V, and supports sufficient current limit.
3. Check the output voltage at J3, J4. The output voltage should be 12V typical. Once the proper output voltage is established, adjust the load within the operating range and observe the output voltage regulation, output voltage ripple, efficiency and other parameters.
4. To use the enable function, apply a digital input to the EN pin of JP3.

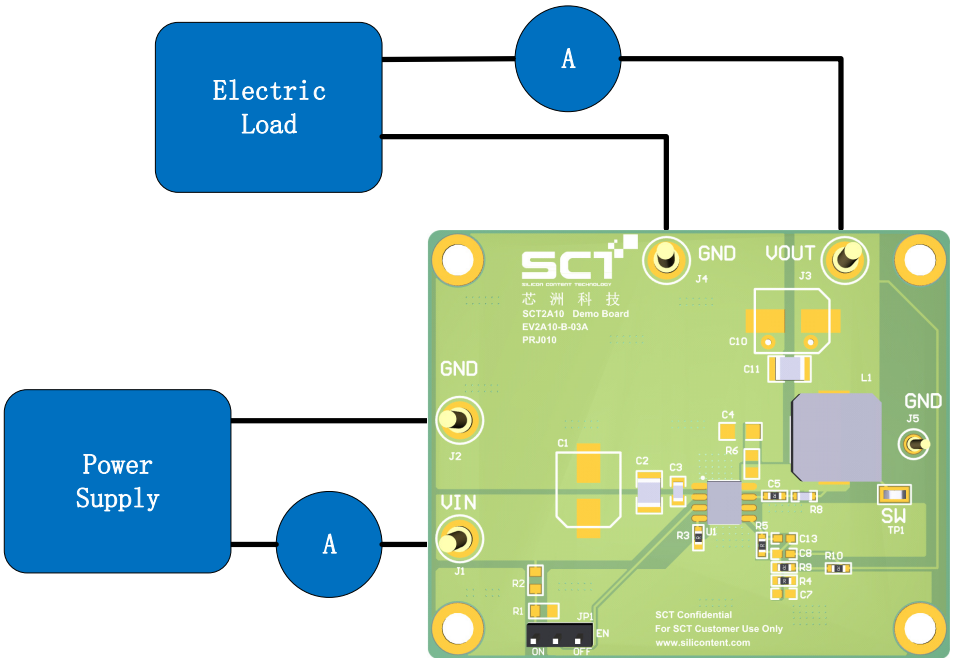

Figure 1. Proper Supply, Load and Measurement Equipment Setup

NOTE: When measuring the voltage ripple, care must be taken to avoid a long ground lead on the oscilloscope probe. Measure the input or output voltage ripple by touching the probe tip directly across relevant capacitor of VIN or VOUT. See Figure 2 for proper scope probe technique.

Figure 2. Measuring Voltage Ripple Across Terminals or Directly Across Ceramic Capacitor

© 2018 Silicon Content Technology Co., Ltd. All Rights Reserved

SCHEMATIC DIAGRAM

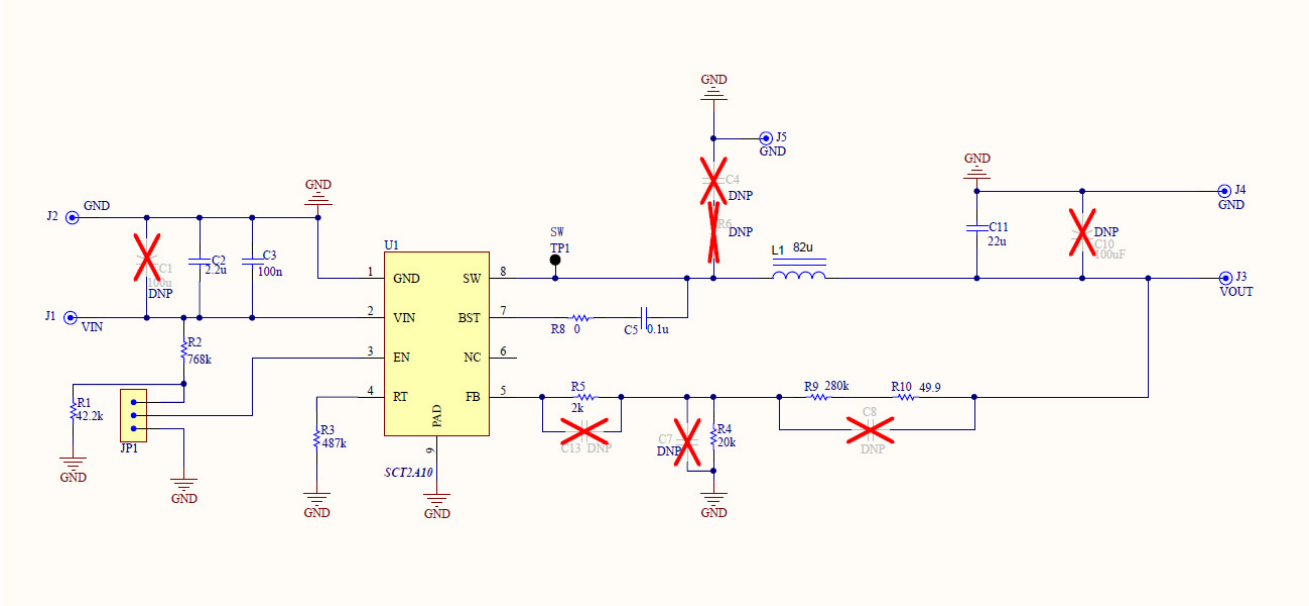

Figure 3. Evaluation Board Schematic

BILL OF MATERIALS

Table 2. Bills of Materials

Footprint	Comment	Part Number	Designator	Description	Quantity
SOP8	SCT2A10	SCT2A10	U1	85V, 0.6AHigh Efficiency Synchronous Step-down DCDC Converter	1
1210	CAPACITOR	885-012-209-071	C2	CAP, CERM, 2.2uF, 100 V, +/- 10%, X7R, 1210	1
0805	CAPACITOR	445-5827-7-ND	C3	CAP, CERM, 100nF, 100 V,+/- 10%, X7R, 0805	1
0603	CAPACITOR	885-012-206-095	C5	CAP, CERM, 0.1 uF, 50V, +/- 10%, X7R, 0603	1
1210	CAPACITOR	885-012-109-014	C11	CAP, CERM, 22uF, 25 V, +/- 10%, X7R, 1210	1
0603	CAPACITOR	DNP	C1	DNP	0
0603	CAPACITOR	DNP	C4	DNP	0
0603	CAPACITOR	DNP	C7	DNP	0
0603	CAPACITOR	DNP	C8	DNP	0
0603	CAPACITOR	DNP	C10	DNP	0
0603	CAPACITOR	DNP	C13	DNP	0
0603	RESISTOR	CRCW0603768KFLEA	R2	RES, 768 k, 1%, 0.1 W, 0603	1

© 2018 Silicon Content Technology Co., Ltd. All Rights Reserved

0603	RESISTOR	RC0603FR-0742K2L	R1	RES, 42.2 k, 1%, 0.1 W, 0603	1
0603	RESISTOR	RC0603FR-07487KL	R3	RES, 487 k, 1%, 0.1 W, 0603	1
0603	RESISTOR	RC0603FR-0720KL	R4	RES, 20 k, 1%, 0.1 W, 0603	1
0603	RESISTOR	RC0603FR-072KL	R5	RES, 2 k, 1%, 0.1 W, 0603	1
	RESISTOR		R6	DNP	0
0603	RESISTOR	0-OHMS	R8	RES, 0, 1%, 0.1 W, 0603	1
0603	RESISTOR	AC0603FR-07280KL	R9	RES, 280k, 1%, 0.1 W, 0603	1
	RESISTOR	RC0603FR-0749R9L	R10	RES, 49.9, 1%, 0.1W, 0603	1
	TERMINAL2.1	TERMINAL2.1	J1，J2，J3，J4	Terminal, 2mm Diameter, TH	4
	TERMINAL1.1	TERMINAL1.1	J5	Terminal, 1mm Diameter, TH	1
WE-HCI_1040	INDUCTOR	7447714820	L1	82uH, 1.85A Isat, 147mohms, 6033R	1
CONN_PEC03SAAN	JUMPER	613 003 111 21	JP1	Header, 100mil, 3x1, Tin plated, TH	1
	TEST POINT	5055	TP1	Test Point	1

© 2018 Silicon Content Technology Co., Ltd. All Rights Reserved

PRINTED CIRCUIT BOARD LAYOUT

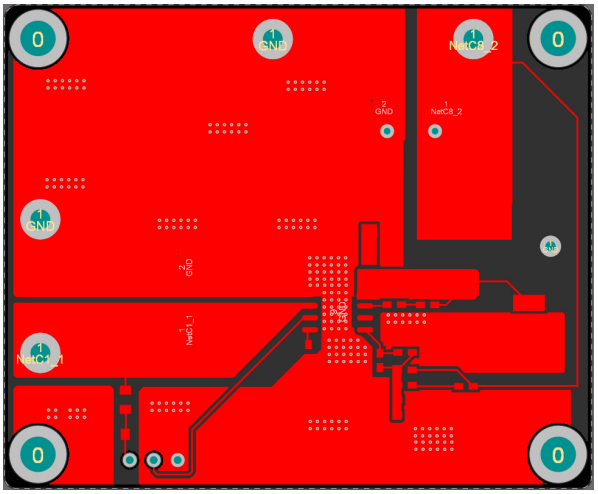

Figure 4.Top Layer

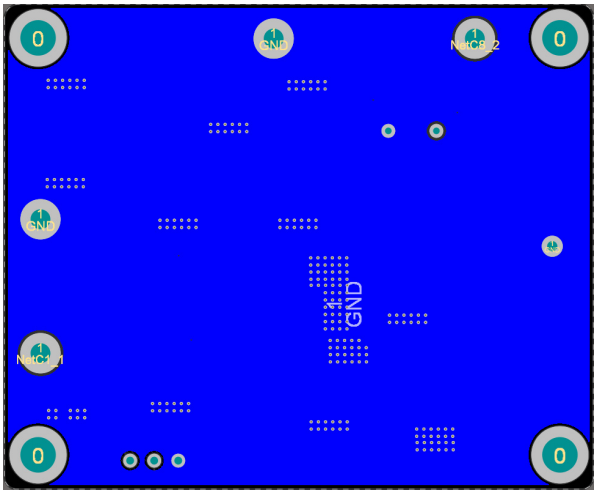

Figure 5.Bottom Layer

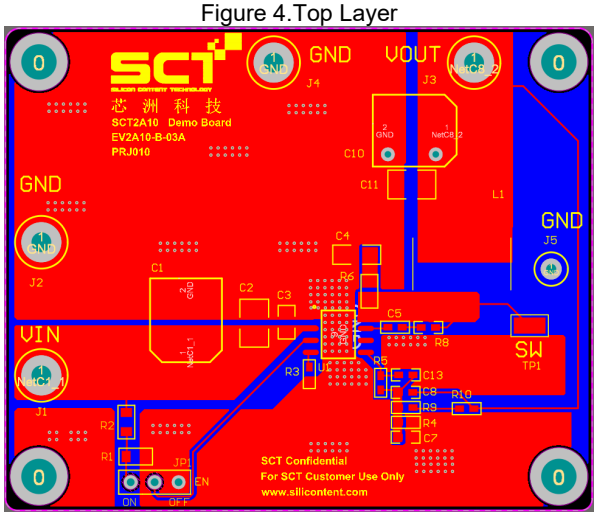

Figure 6. Composite View

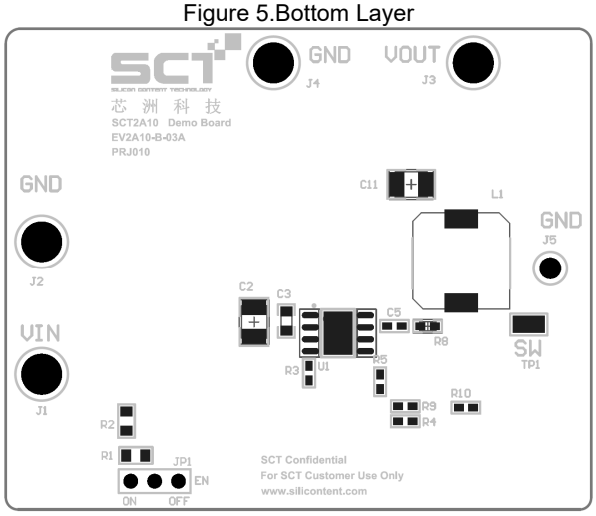

Figure 7. Assemble Drawing

© 2018 Silicon Content Technology Co., Ltd. All Rights Reserved

EVB TEST RESULTS

Vin=48V, Vout=12V, 600mA loading, unless otherwise noted

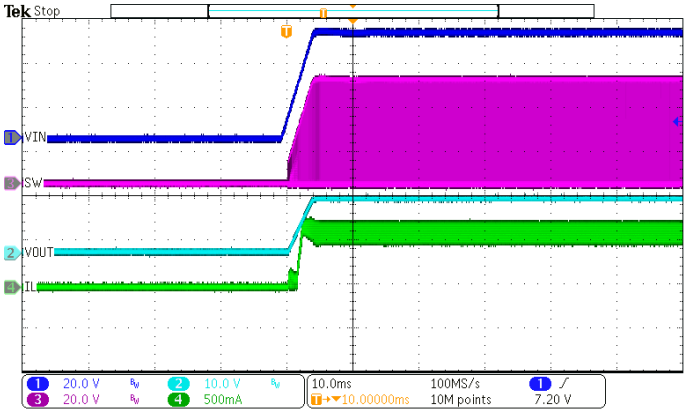

Figure 8. Power Up

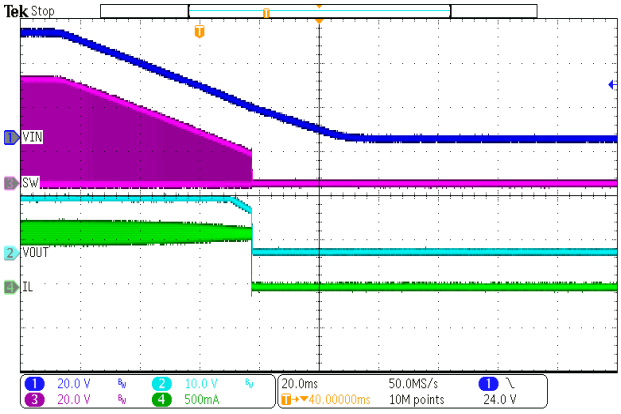

Figure 9. Power Down

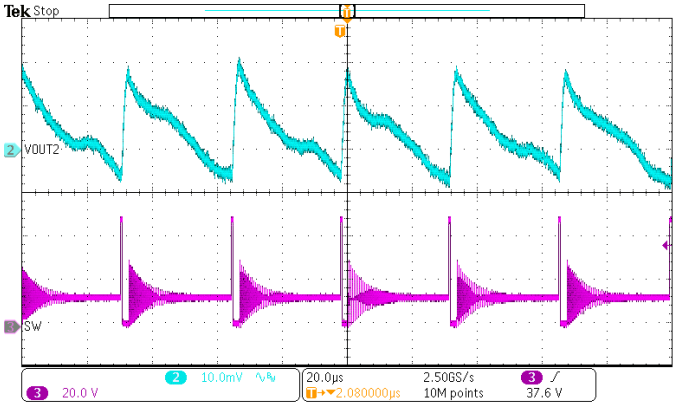

Figure 10. Steady State Ripple
Iout=10mA

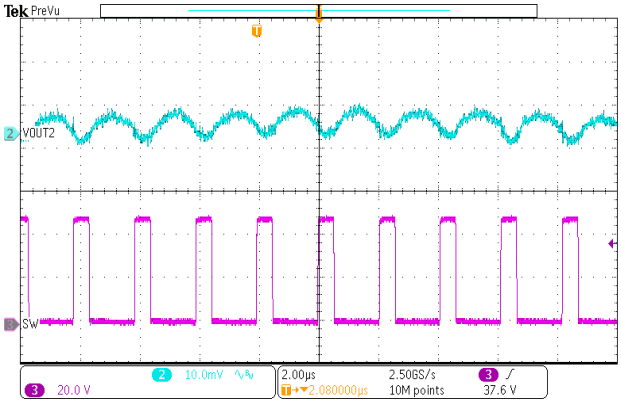

Figure 11. Steady State Ripple
Iout=600mA

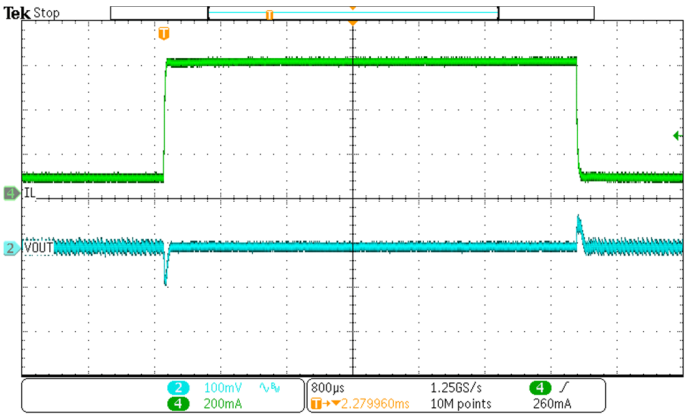

Figure 12. Load Transient
(0.07A-0.53A, SR=250mA/us)

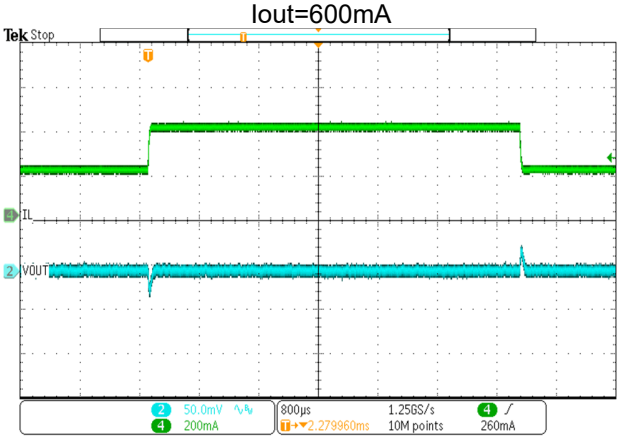

Figure 13. Load Transient
(0.2A-0.4A, SR=250mA/us)

© 2018 Silicon Content Technology Co., Ltd. All Rights Reserved

IMPORTANT NOTICE

This evaluation board kit being sold or provided by Silicon Content Technology is intended for use for ENGINEERING DEVELOPMENT OR EVALUATION PURPOSES ONLY and is not provided by SCT for commercial use. As such, the evaluation board herein may not be complete in terms of required design, marketing, and/or manufacturing related protective considerations, including but not limited to product safety measures typically found in finished commercial goods. The user assumes all responsibility and liability for proper and safe handling of the goods. Further, the user releases SCT from all claims arising from the handling or use of the goods. Due to the open construction of the product, it is the user's responsibility to take all appropriate precautions regarding electrostatic discharge. Also, be aware that the products herein may not be regulatory compliant or agency certified (FCC, UL, CE, etc.). No License is granted under any patent right or other intellectual property whatsoever. SCT assumes no liability for applications assistance, customer product design, software performance, or infringement of patents or any other intellectual property rights of any kind. Please read the Evaluation Board user's guide prior to handling the product. Persons handling this product must have electronics training and observe good laboratory practice standards. Common sense is encouraged. This notice contains important safety information about temperatures and voltages. For further safety concerns, please contact a SCT application engineer.
.

,

© Silicon Content Technology